STUDY OF FLOW PHENOMENA IN AORTIC DISSECTION

Maurizio Bordone[*], Eugenio Oñate[*], Paula Rudenick[§], Bart Bijnens[§] and Eduardo Soudah[*]

[*] International Centre for Numerical Methods in Engineering (CIMNE)
Campus Norte UPC, 08034 Barcelona, Spain
E-mail: mbordone@cimne.upc.edu
[§]Universitat Pompeu Fabra, Plaça de la Mercè. 08002 Barcelona

Key words: Aorta Dissection, FEM, Fluid Dynamic, hemodynamic.

Abstract

Predict the evolution of the rupture in Chronic Aortic Dissection poses a cardiovascular challenge. Several parameters must be studied to determinate this evolution, in any cases is demonstrated that dilatation is triggered by fluid-dynamic parameters (intra-luminal pressure and wall shear stresses) and physiological vessel wall properties, but these hemodynamic factors are really important in the final evolution of the aortic dissection. In order to improve the behaviour and the development of different cases of chronic dissection, is needed a better understanding of pressure and velocity influence on the false lumen (FL) and true lumen(TL) of the vessel, including the study of different scenarios of entry and exit tears. For this reason, we have performed FEM analysis in a typical aortic dissection, closely resembling clinical practice (Stanford B or Type III DeBakey dissection[1]). The aortic dissection was created with a FL had double diameter of the TL. Different entry and exit tear configurations were studied: only entry, only exit and equally sized entry and exit tears. A 3D computational fluid dynamics simulation (using the GID software environment) of the cardiac cycle was performed. Velocity, Shear Stress and pressure profiles were analyzed in the TL and FL and all along the geometry with GiD tools.

1. INTRODUCTION

The Aortic dissection is probably the most common catastrophe of the aorta, 2-3 times more common than rupture of the abdominal aorta. Aortic dissection is a tear in the wall of the vessel. The blood can flow between the layers of the wall of the aorta and force, with the pressure of heartbeat, the layers apart. Aortic dissection is a medical emergency because can quickly lead to death, even with optimal treatment. If the dissection tears the aorta completely open (through all three layers), massive and rapid blood loss occurs. When left untreated, about 33% of patients die within the first 24 hours, and 50% die within 48 hours. The 2-week mortality rate approaches 75% in patients with undiagnosed ascending aortic dissection. If the dissection reaches 6 cm, the patient needs an emergency surgery. To start the study of this kind of phenomena, we want to compare real measurement in a silicon phantom with the same model, reproduced with finite element methods. Good results may be used to prevent and to study the effect of surgery and external interventions and to foresee the development of the injury in the next future.

[1]Originates in descending aorta, rarely extends proximally but will extend distally.

2. METHODS

2.1. Geometry

The models studied were constructed using GiD[i] according to the models presented in the article "Cine Phase-Contrast Magnetic Resonance Imaging for Analysis of Flow Phenomena in Experimental Aortic Dissection"[ii]. GiD Pre-processor tools permit us to construct the geometry with high fidelity of starting reference geometry. The descendent aorta was designed with the specifications of dissection problems; joint it at the outlet section. The angles used, the dimensions are typical in a several studies of real aorta (central arc of 165 degrees with a radius of 0.03m). Entrance of the aortic dissection was connected to a reproduction of the aortic arch using the same internal diameter. The measurements specifications are shown in figure 1.

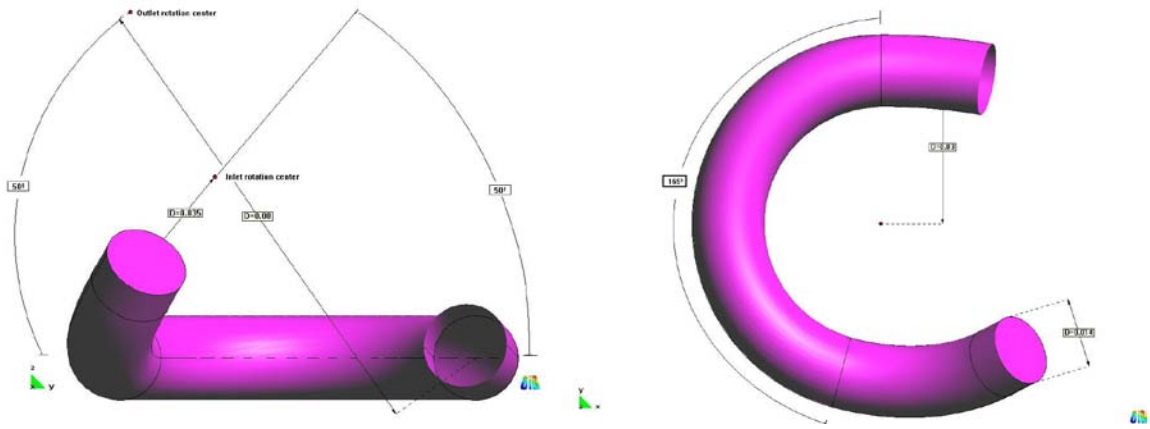

Figure 1. Specifications of aortic arch, plane YZ and plane XY

The entrance to the planar arch (the ascending aorta) is via an 11.5mm long straight section and a curve that extends through 55º in a plane angled at 50º with respect to the main arch plane. The outlet curves through 15º in a mirrored plane before forming the descending aorta from a long straight section. The curved ascending and descending sections is shown in figure 2. Jointing the aortic arch with the descendent aorta, with the dissection injury is obtained the geometry shown in figure 2.

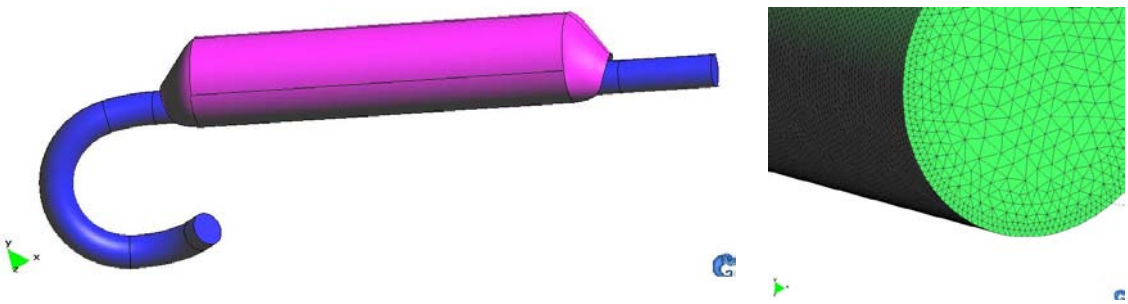

Figure 2. Whole test geometry. It is possible to see the different sections and the different cavity in the dissection zone and detail of mesh in outlet section

Eight models were analyzed using different scenarios of tears positions. Table 1 shows a summary of the models reproduced (8 models with two types of hole: one circular

with a diameter of 4 mm and another one with an increased diameter of 10mm). All the models were meshed with about 2 millions of elements, giving big importance to the boundary layer, due to the common phenomena of big velocity variability near the walls of the pipe. Figure 3 shows a detail of the tears.

Name	Proximal Tear (mm)	Distal Tear (mm)
AD_A	4	-
AD_B	10	-
AD_C	-	4
AD_D	-	10
AD_E	4	4
AD_F	4	10
AD_G	10	4
AD_H	10	10

Table 1. Summary of models analyzed.

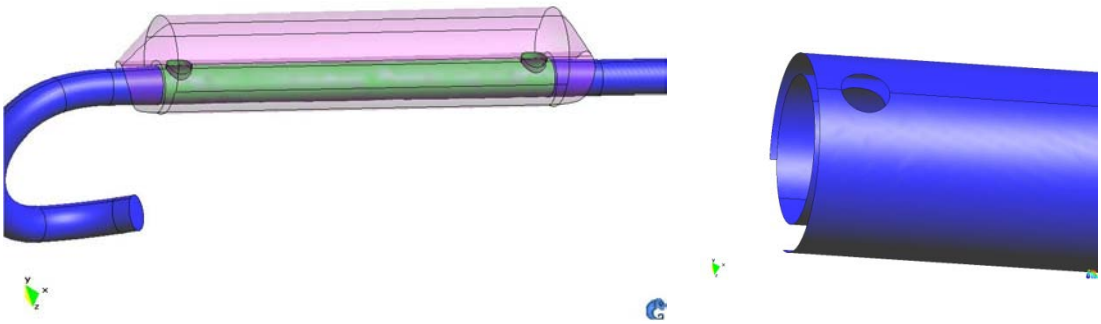

Figure 3. Position of the dissection tears. In the image is showed case AD_H, with two tears of 10 mm of diameter and a detailed image of a tear of 5 mm

3. COMPUTATIONAL FLUID MECHANICS SOLVER.

Blood is a suspension of red and white cells, platelets, proteins and other elements in plasma and exhibits an anomalous non-Newtonian viscous behaviour when exposed to low shear rates or flows in tubes of less than 1mm in diameter. However, in large arteries, vases of medium calibre as well as capillaries, the blood may be considered a homogeneous fluid, with “standard” behaviour (Newtonian fluid)[iii]. The governing equations for blood flow used in this work are the Navier-Stokes equations, with the assumptions of incompressible and Newtonian flow (90% of the blood is water).

For the representation of the Navier-Stockes equations on the deforming fluid domain Ω of the aortic dissection model based on the arbitrary Lagrangian-Eulerian (ALE) method[iv], we adopt the following notation: Ω is a three-dimensional region denoting the portion of the district on which we focus our attention, and $x=(x1, x2, x3)$ is an arbitrary point of Ω; $v=v(x, t)$ denotes the blood velocity. For $x \varepsilon \Omega$ and $t > 0$ the conservation of momentum and continuity in the compact form are described by the following Eq. (1):

$$\rho \cdot \left(\frac{\partial \mathbf{u}}{\partial \mathbf{t}} + (\mathbf{u} \cdot \bigtriangledown \mathbf{u}) \right) + \nabla\, p - \nabla \cdot (\mu \bigtriangleup \mathbf{u}) = \rho \cdot \mathbf{f} \qquad \text{in } \Omega(0,t)$$
$$\nabla u = 0 \qquad \text{in } \Omega(0,t)$$

Equation 1

where u = u (x, t) denotes the velocity vector, p = p (x, t) the pressure field, ρ density, μ the dynamic viscosity of the fluid and f the volumetric acceleration. Blood flow is simulated for average blood properties: molecular viscosity μ =0.0035 Pa.s and density ρ = 1040 kg/m3. The volumetric forces (ρ·f) are not taken in to account in the present analysis.

For solving fluid problems was used, Tdyn[v] [vi] that provides an innovative stabilization method based on the Finite Increment Calculus (FIC) concept[vii] [viii] , that by considering the balance of flux over a finite sized domain, higher order terms naturally appear in the governing equations, which supply the necessary stability for a classical Galerkin fem discretization to be used with equal order velocity and pressure interpolations.

3.1.Boundary conditions.

Velocity profile used in the test is shown in figure 4, it reproduce a real heartbeat, with a frequency of 1.25 Hz. Figure shows the variation in the time of the mean velocity at the entrance, while the strength line the profile is also designed to take a shape of a parabolic, to simulate a stabilized flow in a common pipe as showed in figure 4. Also the pressure has a frequency of 1.25Hz, in accord to the velocity imposed. Pulsatile pressure waveform was calculated using a 1D model[ix] and validate with different analysis cases. The data reflect a normal physiologic scenario in order to make the analysis more realistic.

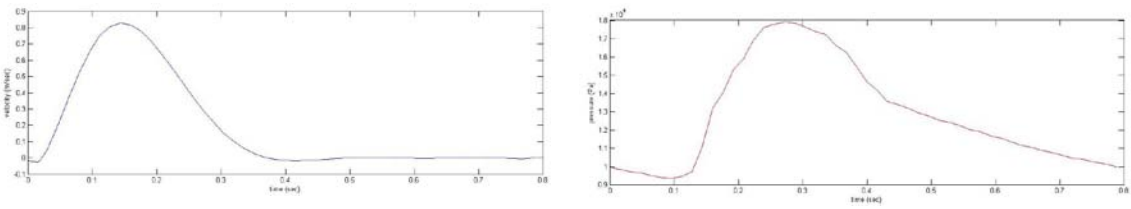

Figure 4. Mean velocity profile with parabolic flow and pressure profile.

The boundary conditions for the pulsatile flow, the inflow mean velocity is time dependent and the volumetric flow rate is oscillatory. The pulsatile velocity waveform is represented by a polynomial equation based on the in-vivo measurement by magnetic resonance imaging. This pulse is appropriate for normal conditions in the ascendant segment of human aorta, figure 4.

4. RESULTS

The eight different examples of the possible scenarios of aortic dissection were analyzed. Important differences were found in cases with 1 or 2 tears. Cases with 1 tears present less pressure variation, while cases with two tears present the same variation of pressure present in FL and in TL. The velocity field is extremely dependent of the dimension and numbers of the tears. Figure 5 and 6 show some of these analyses.

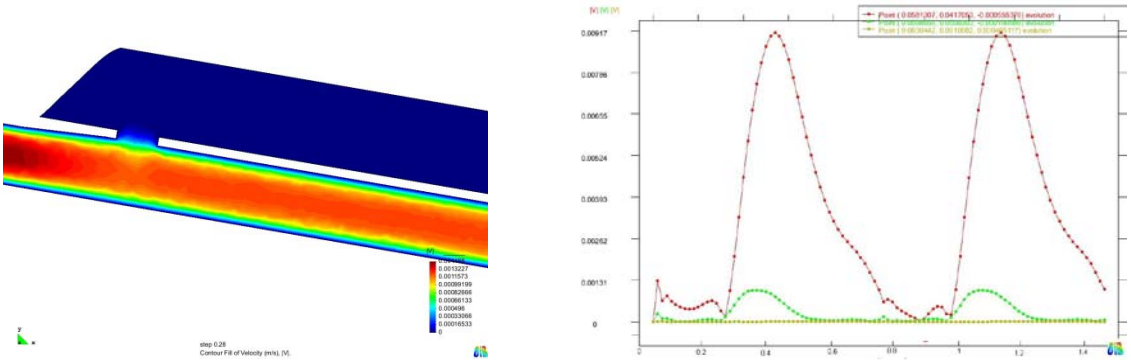

Figure 5 Mean velocity registered in FL (yellow line), TL (red line) and the middle of the tear,

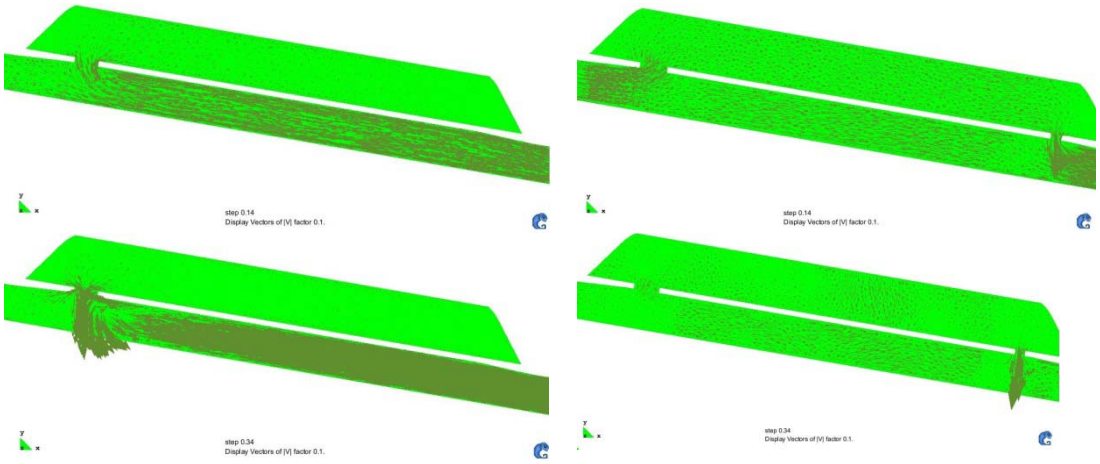

Figure 6 Velocity stream lines comparison in, cases AD_B (on the left) and AD_G (on the right) at time 0.15sec (upside) and 0.35 sec (down side)

5. CONCLUSIONS.

Hemodynamic conditions (velocity, pressure, shear rate and all measurable variables) play an important role in the modulation of vascular adaptation and localization of vascular diseases. Understanding hemodynamic factors and environment in a region of the vascular system is consequently important field of research. The results obtained show the great potential of simulation and analysis of GiD and Tdyn, giving us the hope of good possibilities to develop the investigations about the hemodynamic field, moreover we have the possibility to know more about the adaptation of the vessel exposed to cyclic changes of pressure, like in the real life, in physiological or pathological situations. The study focused on the aortic dissection and the variation of hemodynamic values in accord to the changes of vessel geometry; this fact permits us to understand better how the position of the tears and his dimension modify the pressure values and the velocity values. The last example shown can will be a mile stone in the medical investigation, because can pass through all the fundamental steps of a complete and realistic analysis. In a future will be important to get faster these processes and to automatist them. Only in this case, clinicians will easily work with these tools, increasing their performance and getting better population health. To perform more accurate simulation will be also interesting to use 4D real images in order to reconstruct the real geometry and to perform testes with specific flow profiles, increasing the help to physician in his diagnostic works. Physicians and medical staff could be participate

to the improvement of this kind of research and investigation, to increase the capacity of FEM simulation to reproduce real cases of diseases and use them to enhance the possibility of make diagnosis with no invasive techniques and produce results in a quick and economic way.

6. BIBLIOGRAPHY

[i] www.gidhome.com GiD - The personal pre and postprocessor, (2006).

[ii] Cine Phase-Contrast Magnetic Resonance Imaging for Analysis of Flow Phenomena in Experimental Aortic Dissection, Fumiharu Iwai, MD, H.Dirk Sostman,MD, Avery J. Evans, MD, Scott N. Nadel, MD, Laurence W. Hedlund, PPhD, Craig A. Beam, PhD, H. Cecil Charles, PhD, and Charles E.Spritzer, MD.

[iii] Perktold, et al., "Pulsatile non-Newtonian Blood Flow in Three-Dimensional Carotid Bifurcation Models: A Numerical Study of Flow Phenomena under Different Bifurcation Angles", Nov. 1991, J. Biomed. Eng., vol. 13, pp. 507–515

[iv] Formaggia, L., Nobile, F., Quarteroni, A., Veneziani, A. (1999). Multiscale modelling of the circulatory system: a preliminary analysis.Comput.Visual.Sci.2, 75–83

[v] Oñate, E., García, J., Idelsohn, S.R. and del Pin, F. "Computer Methods in Applied Mechanics and Engineering", "Finite calculus formulation for finite element analysis of incompressible flows. Eulerian, ALE and Lagrangian approaches" Elsevier,Laussane (Switzerland), 2006,ISSN 0045–7825.

[vi] COMPASS Ingeniera y Sistemas SA. Tdyn. Environment for Fluid Dynamics (Navier Stokes equations), Turbulence, Heat Transfer, Advection of Species and Free surface simulation. Theoretical background and Tdyn 3D tutorial. March (2002).

[vii] Oñate, E., Valls, A., García, J. "Journal of Computational Physics", "Modeling Incompressible Flow at Low and High Reynolds Numbers via a Finite Calculus-Finite Element Approach", Elsevier, New York (USA) 2007, ISSN 0021–9991.

[viii] Oñate, E., Valls, A., García, J. "Computational Mechanics", "FIC/FEM formulation with matrix stabilizing terms for incompressible flows at low and high Reynolds numbers", Springer Berlin / Heidelberg, 2006 ISSN: 0178-7675 (Paper) 1432–0924 (Online).

[ix] Soudah, E., Mussi, F. and Oñate, E. "Validation Of The One-Dimensional Numerical Model In The Ascending-Descending Aorta With Real Flow Profile". III International Congress on Computational Bioengineering (ICCB 2007) Venezuela.