AN INTERFACE FOR AN HP-ADAPTIVE FINITE ELEMENT PACKAGE USING GID

Daniel Garcia-Doñoro[a], Luis E. Garcia-Castillo[a], and Ignacio Gómez-Revuelto[b]

[1] [a]Dep. Teoría de la Señal y Comunicaciones, Universidad Carlos III de Madrid
Escuela Politecnica Superior(Edificio Torres Quevedo), Avenida de la Universidad, 30
28911 Leganes - Madrid, Spain. Phone: +34-91-6249171, Fax: +34-91-6248749
Email: [dgdonoro,luise]@tsc.uc3m.es
[b]Departamento de Ingeniería Audiovisual y Comunicaciones, Universidad Politécnica de Madrid
Email: igomez@diac.upm.es

Key words: finite elements, hp-adaptivity, geometrical modeling, user interface

Abstract. *This paper presents an interface between GiD and GMP, the Geometrical Modeling Package of the fully automatic hp-adaptive FE (Finite Element) software, developed at ICES (University of Texas at Austin). GiD is used to construct a tessellation of the problem domain into FE-like regions (blocks in GMP terminology), and the interface obtains and transfers all the topological and geometrical information to GMP. Then, GMP automatically constructs a parameterization for each FE-like region of the GMP mesh, which later can be used to generate the actual FE-mesh and support geometry updates during mesh refinements.*

1 Introduction

Finite element hp-adaptivity is a technology that allows for very accurate numerical solutions by simultaneously varying the size h and the polynomial order p of the elements of the mesh. It is worth noting a fully automatic hp-adaptive implementation, [1], [2], developed at ICES (University of Texas at Austin), in which some of the authors of this paper have contributed.

An hp-mesh obtained with the mentioned automatic adaptivity is shown in Fig. 1(d). Color indicates, according to the scale on the right, the polynomial order p of the finite elements (the dark blue being $p = 1$ and the pink $p = 8$). The mentioned hp-mesh is generated from the initial mesh shown in Fig. 1(c). It is observed how, despite the approximation of the quarter of a circle by two straight lines in the initial mesh, the adaptivity has been able to generate a mesh that provides a very good approximation of the curved contour. This is possible because geometry updates are allowed during mesh refinements. That important feature requires the knowledge of the exact geometry of the structure. For that purpose the so called Geometrical Modeling Package (GMP), [3], is used by the hp-code to support geometry information, independently of the mesh. GMP models structures as a combination of blocks (triangles, rectangles, prisms, hexahedrons, etc), each block being defined in terms of explicit or implicit parameterizations. Thus, a FE-like mesh is obtained. An example in 2D is shown in Fig. 1(a). However, it is

[1]This work has been supported by the Ministerio de Educación y Ciencia of Spain under projects TEC2004-06252/TCM and TEC2007-65214/TCM, and Air Force Research Laboratory under agreement number FA8655-07-1-3041

important to note that the actual FE-mesh for the analysis is generated from GMP information by using a multi-block hp-mesh generator integrated in the hp-code.

Information about the different block is entered into GMP by a text file (ASCII) that can be written in severals formats. This file can be generated by hand. However, for complex engineering structures, this process is very slow and costly.

In this context, the automatic generation of the GMP file arises as an important objective in order to improve the usability of the hp-code. This paper presents an interface between GiD and GMP. A module (*problem type*, in GiD terminology) named *GiDtohp* has been developed. A tessellation of the problem domain into FE-like regions (blocks in GMP terminology) is constructed using GiD tools extended by *GiDtohp* module. Once the blocks are defined, the logic implemented in *GiDtohp* obtains and transfers all the topological and geometrical information to GMP (by writing the GMP text file mentioned above).

2 Interface features

There are two main working modes for *GiDtohp* interface. In one of the modes, each one of the FE-like regions or blocks (surfaces in 2D and volumes 3D) are created directly by the user employing available GiD draw tools and utilities. This mode is named *geometry mode* as the user is basically in GiD's *geometry view*. Figure 1(b) shows an example of this working mode in which GiD points, lines, and surfaces, can be seen. Those GiD entities, and the connectivity information associated to them, are transformed into GMP points, curves, and rectangles (and triangles), and connectivity information compatible with GMP. Parameterizations for each triangle or rectangle (the blocks for the 2D case) are constructed by GMP. From them, an initial hp-mesh is generated (see Fig. 1(c)).

The module contains specific procedures using TCL-TK and TKWidget, providing a graphical and comfortable environment to the user for several tasks. For instance, the assignment to each block of the number of subdivisions that will be used to generate the initial hp-mesh is illustrated in Fig. 2(b). Note that two subdivisions (on each direction) have been created at each original block for the example of Fig. 1(c). The polynomial order associated to each block, which will be used later to set the order of the FE of the initial hp-mesh, is also introduced by using the same window. Note that the polynomial order has been set in the example to one for all blocks. Analogously, the interface provides graphical procedures to assign boundary conditions (see Fig. 2(c)). Other GMP and hp-code parameters needed for the analysis are also introduced by using specific windows. Due to paper length constraints they are omitted.

Once the user has completed the definition of the blocks, the user may execute the option to generate the GMP text files. That is performed by selecting the *geometry mode* button on the left part of window shown in Fig. 2(a). An example of hp-mesh generated by the hp-code from initial mesh of Fig. 1(c) is shown in Fig. 1(d). Geometry refinements around the curved are observed.

The other mode is oriented to structures in which the number of blocks needed in order to define them is large enough that is not practical to manually define each of them. In this mode, a mesh is generated by GiD using the boundary of the present geometry. This mode is named *mesh mode* because it makes use of the mesh capabilities of GiD. An example is shown in Fig. 1(e). Each of the finite elements of the GiD mesh will become a block for GMP. That is

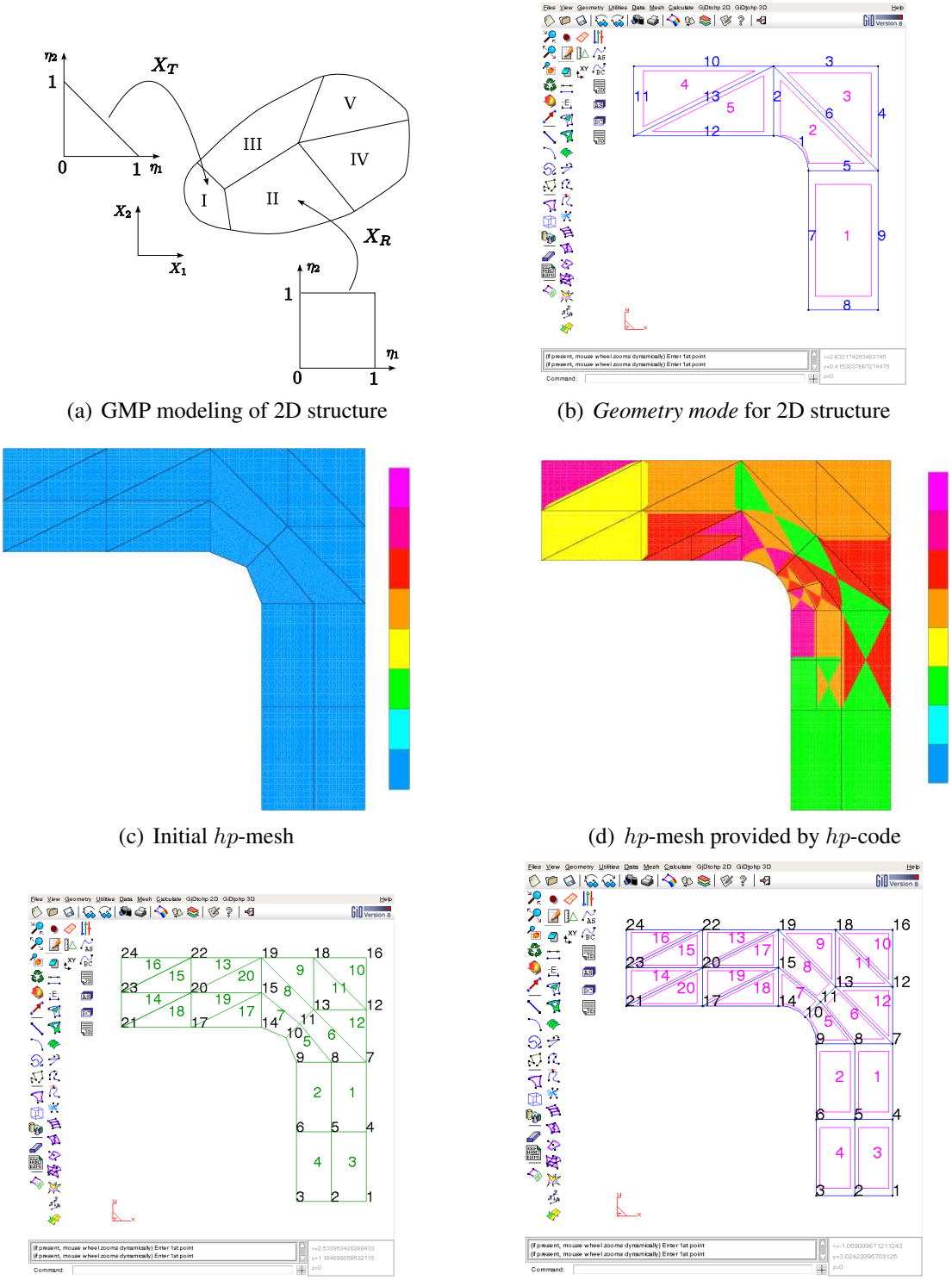

(a) GMP modeling of 2D structure

(b) *Geometry mode* for 2D structure

(c) Initial *hp*-mesh

(d) *hp*-mesh provided by *hp*-code

(e) *Mesh mode* for 2D structure

(f) Auxiliary geometry of *mesh mode*

Figure 1: Screenshots (Part I)

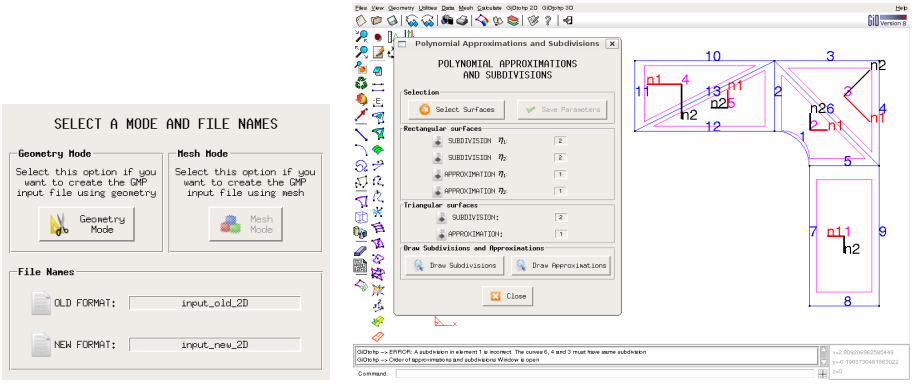

(a) 2D modes selection window (b) Assignment of subdivisions and polynomial order

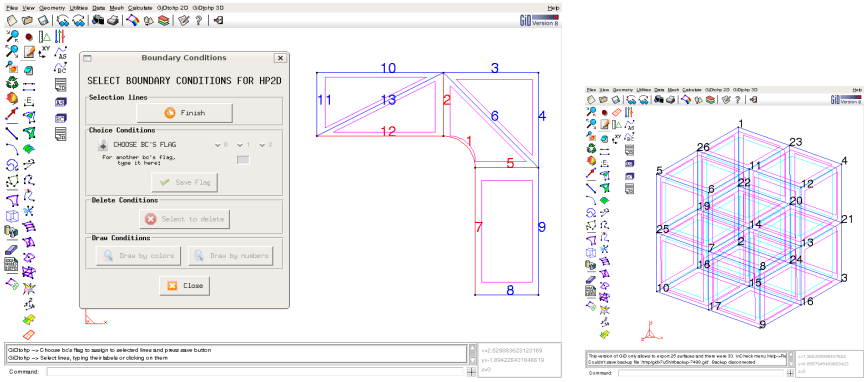

(c) Assignment of boundary conditions (d) *Geometry mode* for 3D

Figure 2: Screenshots (Part II)

done when selecting the *geometry mode* button on the right part of window shown in Fig. 2(a). An auxiliary geometry is created (although not visible by the user, it is shown in Fig. 1(f)). From that auxiliary geometry the GMP text files are generated following pretty much the same procedures that when in geometry mode.

The 2D version of the interface supports straight lines, arcs and NURBS lines. The 3D version, at the moment, does not support non planar surfaces. An example of 3D structure (known as Fichera's corner) created with *GiDtohp* in geometry mode is shown in Fig.2(d).

References

[1] L. Demkowicz, *Computing with hp Finite Elements. I. One- and Two-Dimensional Elliptic and Maxwell Problems*. Chapman & Hall/CRC Press, Taylor and Francis, Oct. 2006.

[2] L. Demkowicz, J. Kurtz, D. Pardo, M. Paszynski, W. Rachowicz, and A. Zdunek, *Computing with hp Finite Elements. II Frontiers: Three Dimensional Elliptic and Maxwell Problems with Applications*. Chapman & Hall/CRC Press, Taylor and Francis, 2007.

[3] D. Xue and L. F. Demkowicz, "Geometrical modeling package. version 2.0," Tech. Rep. 30, Institute for Computational Engineering and Sciences, Aug. 2002.